ECSEL Joint Undertaking
Electronic Components and Systems for European Leadership

5G_GaN2

Heterogeneous integration of state of the art Semiconductor Technology

Strategic Objective

5G_GaN2 has as major objective to develop new industrial disruptive technologies from semiconductor to integration. It will support the birth of new sub system architectures and target the steps in performances for the 5G generation from Ku to E bands for BTS, point to point & SATCOM communication networks

www.5ggan2.eu

Start date:	1 June 2018
Duration:	36 months
Total costs:	21 M€
Number of participants:	17
Number of countries:	9
Project coordinator:	Philippe Auxemery

5G Telecom and Satcom Active Antenna System

Phased antenna arrays are a vital part of the newly emerging 5G technologies. Thanks to the ability of beam-forming and beam-steering spatial diversity is achieved. The spatial diversification is reached by enabling control over the shape and direction of the antenna's radiation pattern.

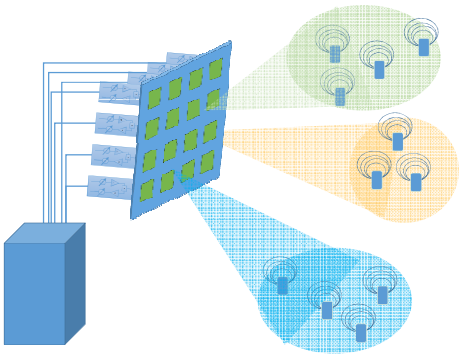

The radiating elements of phased antenna arrays ought to be spaced by about 0.5λ. At 30GHz, the mesh of the antenna is about 5mm, therefore transmit and receive RF components must be smaller then 5X5mm²

Fan Out Wafer Level Packaging benefit

- High integration
  - Active and passive dies
  - Short interconnections
- Heterogeneous integration
  - Mix of state of the art technologies for RF and digital functions
- Top side thermal contact

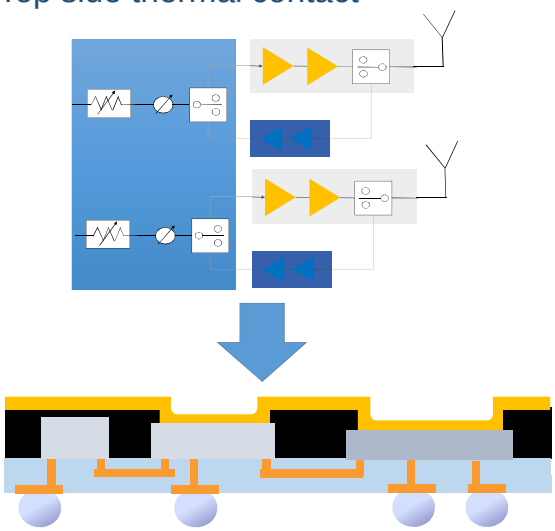

Advanced Semiconductor Power Technologies

- 0.15 µm GaN on Si technology compatible of 8" inches CMOS line
- mmWave 0.08µm GaN on SiC power technology

ECSEL Joint Undertaking
Electronic Components and Systems for European Leadership

5G_GaN2

Heterogeneous integration of state of the art Semiconductor Technology

0.15&0.1µm GaN Technology

5G RF Front End 24-30GHz mixed GaN/GaAs

39GHz RFSOI Switch

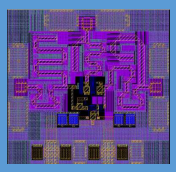

80GHz 2W GaN High Power Amplifier

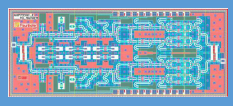

Compact RF Front End demonstrators covering 28, 39 and 80 GHz based on innovative Wafer Level Packaging integration

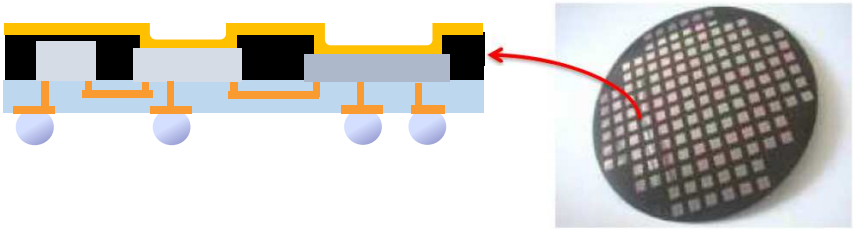

- 3D integration
- New system architecture
- Mixed of RF and digital functions

ECSEL Joint Undertaking
Electronic Components and Systems for European Leadership

YOUR PROJECT NAME

BUCHAREST

ECSEL JU SYMPOSIUM

June 17-18 2019

SHAPING DIGITAL INNOVATION

ECSEL Joint Undertaking
Electronic Components and Systems for European Leadership

YOUR PROJECT NAME

BUCHAREST

ECSEL JU SYMPOSIUM

June 17-18 2019

SHAPING DIGITAL INNOVATION